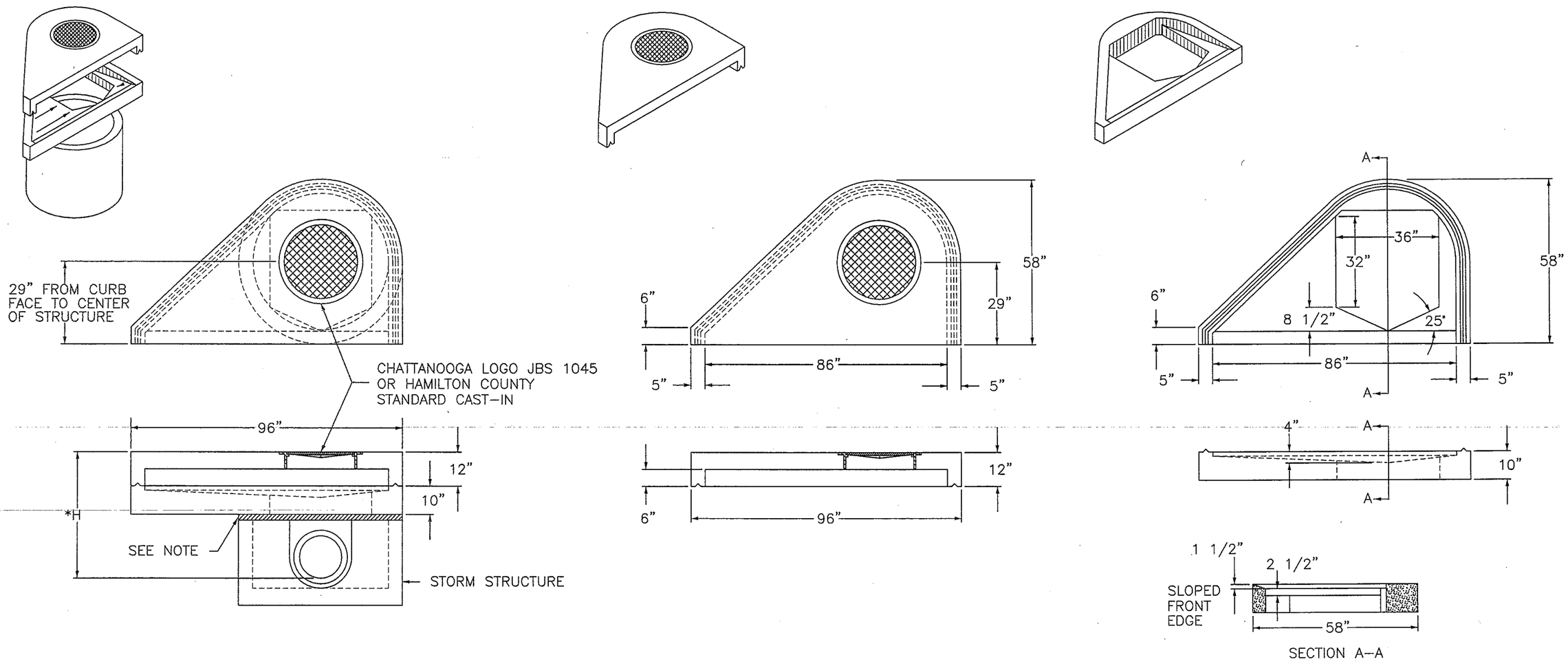

NOTE

4" OF ADJUSTMENT IF ROADWAY SLOPE IS EQUAL TO OR LESS THAN 5 PERCENT. IF ROADWAY SLOPE EXCEEDS 5 PERCENT, THEN ADDITIONAL ADJUSTMENT MUST BE USED UP TO A MAXIMUM OF 8".

*H: SEE STANDARD SD-610.04

GREGORY L. ABRUTON REGISTERED ENGINEER AGRICULTURE COMMERCE NO. 19117 STATE OF TENNESSEE

TODD E. LEAMON REGISTERED ENGINEER AGRICULTURE COMMERCE NO. 104182 STATE OF TENNESSEE 06/08/06

NO.	REVISION	DATE
1	CURB INLET-LEFT MOVED TO THIS SHEET AND UPDATED	3/27/06
0	INITIAL ISSUE	12/10/99

CITY OF CHATTANOOGA AND HAMILTON COUNTY

CURB INLET-LEFT (PRECAST CONCRETE)

DATE OF ORIGINAL ISSUE
DECEMBER 10, 1999

STANDARD NUMBER : *SD-610.01*

E:\Standard Drawings (AutoCAD)\7_Drainage (SD-600)\SD-610.01.dwg