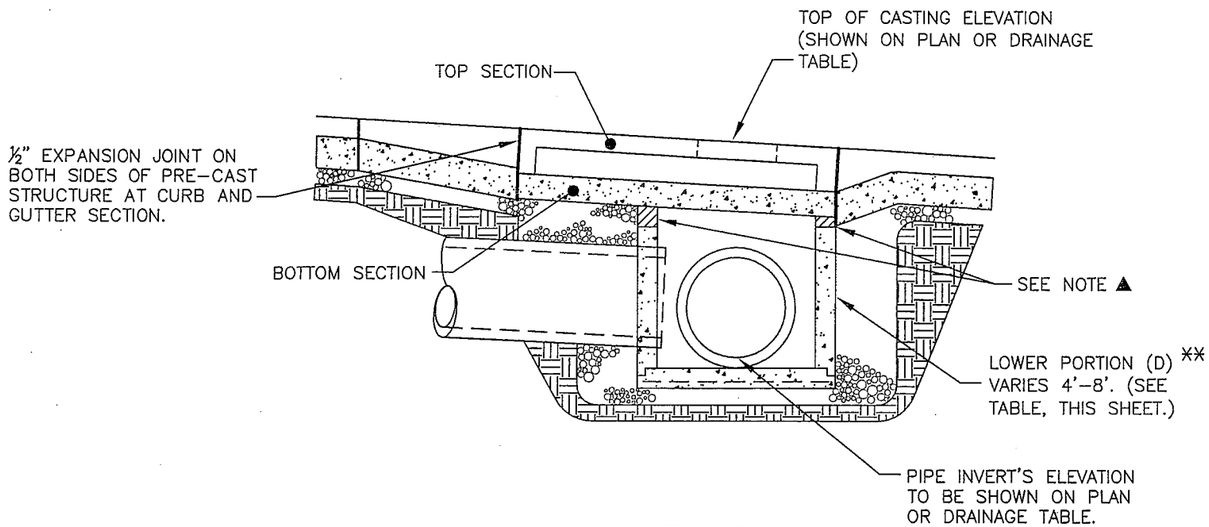

SECTION A-A

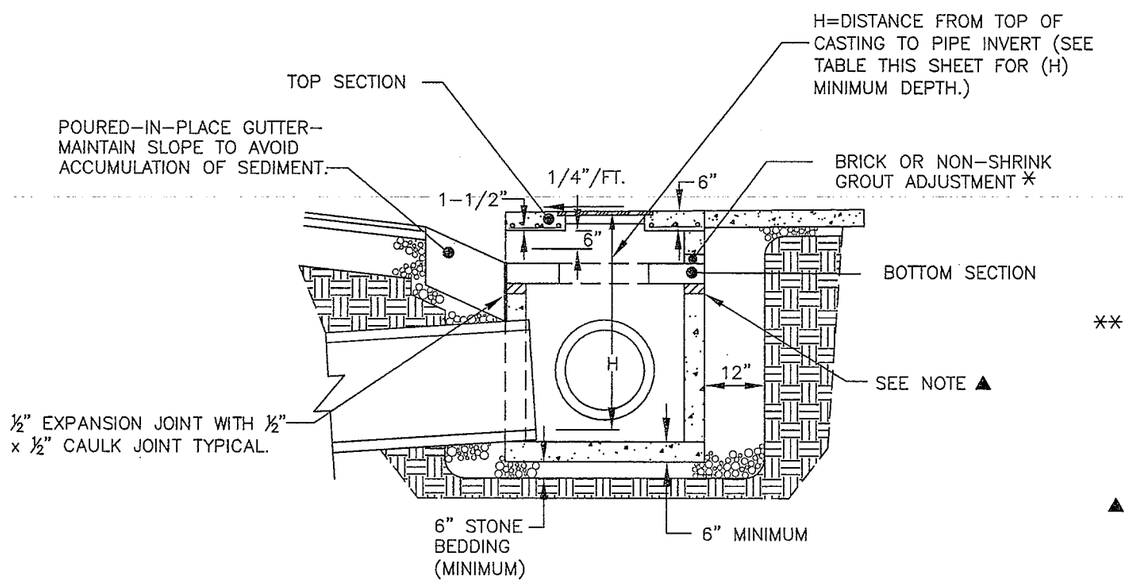

SECTION B-B

* ADJUSTMENTS

FOR BRICK ADJUSTMENT CONSTRUCTION, JOINTS SHALL ALWAYS BE COMPLETELY FILLED WITH MORTAR. VERTICAL MORTAR JOINTS SHALL NOT BE MORE THAN 3/8" THICK AND HORIZONTAL MORTAR JOINTS NOT LESS THAN 3/8" THICK AT THE INSIDE FACE. INSIDE JOINTS SHALL BE TROWEL STRUCK, FLUSH JOINTS TO PROVIDE A SMOOTH, CLEAN SURFACE, WHILE OUTSIDE WALLS SHALL BE ENTIRELY COVERED WITH MORTAR FOR A SMOOTH, CLEAN SURFACE. IF THE REQUIRED ADJUSTMENT IS LESS THAN 3", IT SHALL BE MADE BY PLACING NON-SHRINK GROUT TO OBTAIN THE PROPER ELEVATION AT THE TOP OF THE SLAB.

PIPE SIZE	(D) LOWER PORTION INLET DIAMETER **	(T) WALL THICKNESS	(H) MINIMUM DEPTH
		CONCRETE	
12"	4'	5"	3.25'
15"	4'	5"	3.5'
18"	4'	5"	4.0'
21"	4'	5"	4.25'
24"	4'	5"	4.5'
30"	4'	5"	5.0'
36"	5'	6"	6.5'
42"	6'	7"	6.75'
48"	6'	7"	7.25'
54"	7'	8"	8.0'
60"	8'	9"	8.5'
SPAN / RISE			
23"x14"	4'	5"	3.75'
30"x19"	4'	6"	4.0'
38"x24"	5'	6"	5.25'
45"x29"	6'	7"	5.75'
53"x34"	7'	8"	6.25'
60"x38"	8'	9"	7.25'

** DIAMETER OF LOWER PORTION SHALL MEET MINIMUM DIAMETER (D) AS LISTED ABOVE. DIAMETER IS BASED ON PROPOSED PIPE SIZE. A PRECAST TRANSITION SLAB WILL BE UTILIZED TO ACCOMODATE THE USE OF THE TOP PORTION AS SHOWN AND DIMENSIONED ON THIS DETAIL.

▲ 4" OF ADJUSTMENT IF ROADWAY SLOPE IS EQUAL TO OR LESS THAN 5 PERCENT. IF ROADWAY SLOPE EXCEEDS 5 PERCENT, THEN ADDITIONAL ADJUSTMENT MUST BE USED UP TO A MAXIMUM OF 8".

NOTES

1. THE LOWER PORTION (ROUND, PRE-CAST MANHOLE) SHALL BE CONSTRUCTED TO MEET A.S.T.M. C-478.
2. MANHOLE STEPS ON 12" CENTERS SHALL BE PROVIDED WHEN THE CURB INLET DEPTH EXCEEDS FOUR (4) FEET.
3. THE MANHOLE FRAME AND COVER SHALL BE ACHESON FOUNDRY CASTING A-2522-41C OR EQUAL.
4. THE WORDS "NO DUMPING-DRAINS TO RIVER" ARE TO BE ON THE TOP SIDE OF EACH COVER. (SEE SD-301.03.)
5. CATCH BASIN FRAMES, BACKS, AND GRATES THAT ARE REMOVED BY THE CONTRACTOR SHALL REMAIN THE PROPERTY OF THE OWNER.
6. THE TOP SURFACE OF THE TOP SECTION SHALL HAVE A BROOM FINISH TO MATCH THE EXISTING OR PROPOSED SIDEWALK.
7. THE BOTTOM SECTION MAY BE RECTANGULAR.
8. H= DIMENSION FROM TOP OF CURB/CASTING TO PIPE INVERT
9. FORMULA FOR DETERMINING H = 22" FOR TOP UNIT + 4" ADJUSTMENT BETWEEN TOP AND PIPE CHAMBER + PIPE WALL THICKNESS + PIPE I.D. $(22 + 4 + P + P_T)_o$
   -EXAMPLE FOR 18" RCP - P_T =2.5 P_o =18
   22 + 4 + 2.5 + 18 = 46.5"
   46.5 / 12 = 3.87 (SAY 4.0)
   *ROUNDED UP TO NEAREST 0.25" TO ALLOW FOR SOME FIELD ADJUSTMENT IF REQUIRED BY MINOR FIELD REVISIONS.
10. IN CRITICAL DEPTH SITUATIONS H MINIMUMS CAN BE REDUCED BY 0.25", BUT WOULD NOT SUGGEST TRYING TO DESIGN ENTIRE SYSTEM WITH CRITICAL DEPTH CUT HEIGHTS.
11. TO MEET THE MINIMUM H DIMENSION, PRECAST STRUCTURES MAY HAVE PIPE OPENINGS THAT DO NOT HAVE ANY CONCRETE ABOVE THE PIPE OPENING. PRECAST MANUFACTURER SHALL PROVIDE STAMPED STRUCTURE CALCULATIONS AND DESIGNS TO INDICATE THIS TYPE OF STRUCTURE WILL ACCOMODATE HS 20 LOADING WHEN USED IN CONJUNCTION WITH THE TOP PHASE UNITS.
12. 5' DIAMETER AND LARGER PIPE CHAMBERS REQUIRE 8" TRANSITION SLAB.
13. ADDITIONAL PIPES AND ANGLES MAY REQUIRE LARGER INLET DIAMETER. A MINIMUM OF 1'-0" IS REQUIRED FROM OUTSIDE OF CORE TO OUTSIDE OF CORE.

GREGORY L. ALBRITTON — REGISTERED ENGINEER — AGRICULTURE — COMMERCE — NO. 19117 — STATE OF TENNESSEE

TODD E. LEAMON — REGISTERED ENGINEER — AGRICULTURE — COMMERCE — NO. 104182 — STATE OF TENNESSEE — 05/08/01

NO.	REVISION	DATE
2	ALL MOVED TO THIS SHEET; NOTES 8-13 ADDED; SECTIONS A-A AND B-B ADJUSTED; TABLE ADJUSTED	3/27/06
1	REVISIONS AS MARKED OR CLOUDED	8/24/01
0	INITIAL ISSUE	12/10/99

CITY OF CHATTANOOGA AND HAMILTON COUNTY

CURB INLET (PRECAST CONCRETE)

DATE OF ORIGINAL ISSUE
DECEMBER 10, 1999

STANDARD NUMBER : SD-610.04

E:\Standard Drawings (AutoCAD)\7_Drainage (SD-600)\SD-610.04.dwg