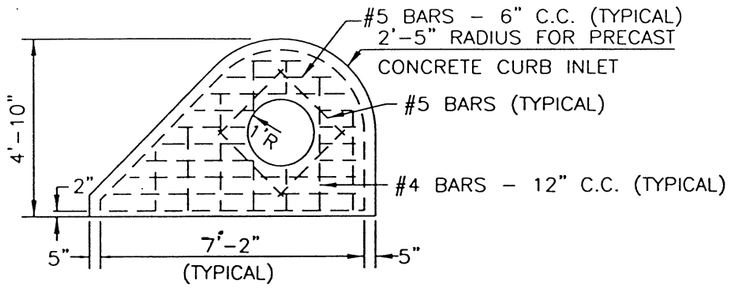

LEFT HAND TOP SECTION
(D) = 4'-8'**

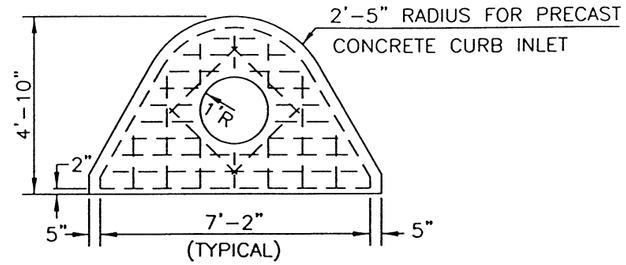

SUMP INLET TOP SECTION
(D) = 4'-8'**

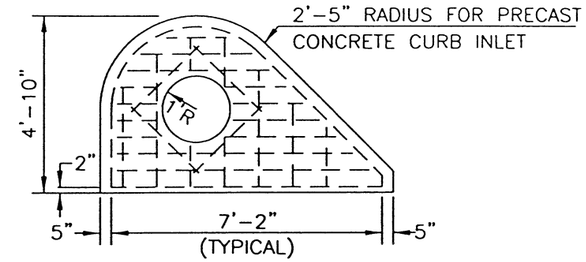

RIGHT HAND TOP SECTION
(D) = 4'-8'**

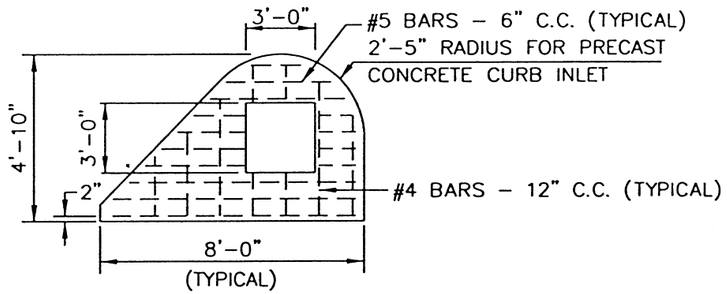

LEFT HAND BOTTOM SECTION
(D) = 4'-8'**

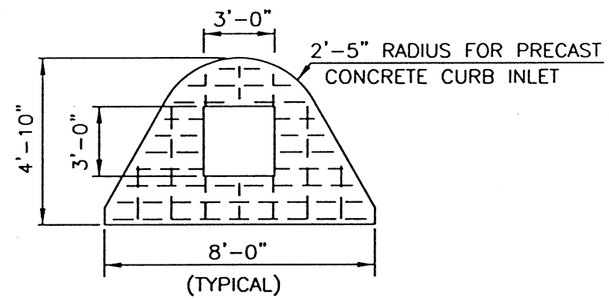

SUMP INLET BOTTOM SECTION
(D) = 4'-8'**

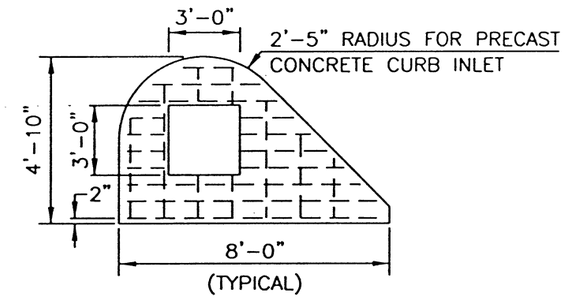

RIGHT HAND BOTTOM SECTION
(D) = 4'-8'**

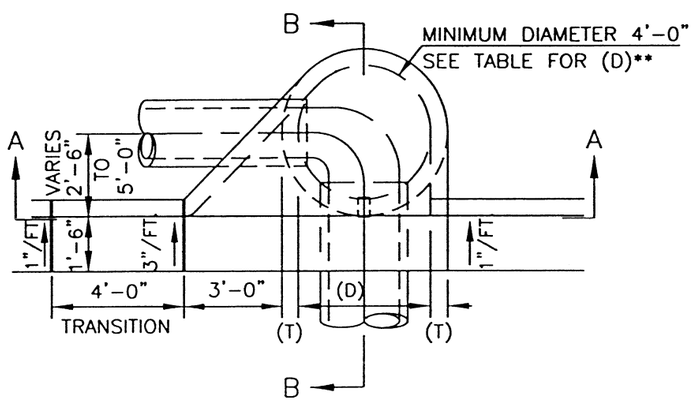

ECCENTRIC CURB INLET
LEFT HAND PLAN

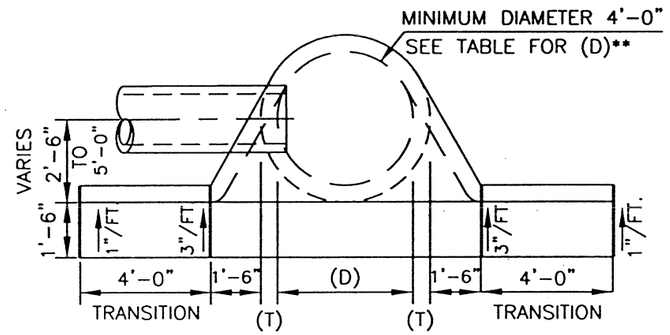

SUMP INLET

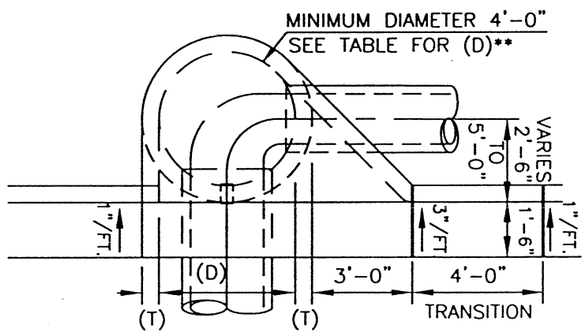

ECCENTRIC CURB INLET
RIGHT HAND PLAN

** SEE DETAILS ON SD-610.02 FOR
CROSS SECTIONS, NOTES, AND DEPTH TABLE.

NO.	REVISION	DATE
0	INITIAL ISSUE	12/10/99

CITY OF CHATTANOOGA AND HAMILTON COUNTY

CURB INLET (PRECAST CONCRETE)

DATE OF ORIGINAL ISSUE
DECEMBER 10, 1999

STANDARD NUMBER : *SD-610.01*

F:\New Folder\u...ail-2.dwg Wed Dec 08 14:56:16 1999 STATIONS 24