BID SOLICITATION

City of Chattanooga
101 East 11th Street, Suite G13
Chattanooga, TN 37402

BID OPENING DATE AND TIME:
19-AUG-14 at 2:00 PM
BID NUMBER: 303435

BUYER:
PHONE #: (423) 643-7230
DELIVERY REQUIRED:

SEALED BIDS

Mail or submit two (2) signed copies of bid form to this office in the enclosed envelope. Retain one copy for your file.

VENDOR
RFQ

MAIL TO
City of Chattanooga
101 East 11th Street, Suite G13
Chattanooga, TN 37402

Item	Class-Item	Quantity	Unit	Unit Price	Total

Requisition No.: 98453
Ordering Dept.: Waste Resources
Buyer: Geoffrey Hipp 423-643-7233
****

DESCRIPTION: Fairbanks Morse Pump Parts
****

ATTACHMENTS:
- Specifications
- Affirmative Action Plan
- Standard Terms and Conditions:
(http://www.chattanooga.gov/general-services/purchasing/standard-terms-and-conditions)
****

*** BIDS MUST BE RECEIVED NO LATER THAN ***
***** 2:00 PM ON AUGUST 19, 2014 *****
****

PLEASE SUBMIT BIDS IN DUPLICATE INDICATING
BID NUMBER (303435) ON OUTSIDE PACKAGING
INCLUDE FREIGHT ESTIMATE WITH BID
****

NOTE: All bids received are subject to the terms and conditions contained herein and as listed in the above referenced website. The undersigned Bidder acknowledges having received, reviewed, and agrees to be bound to these terms and conditions, unless specific written exceptions are otherwise stated.

The City of Chattanooga reserves the right to reject any and/or all bids, waive any informalities in the bids received, and to accept any bid which in its opinion may be for the best interest of the city.

The City of Chattanooga will be non-discriminatory in the purchase of all goods and services on the basis of race, color, or national origin.
****

PLEASE PROVIDE US WITH THE FOLLOWING INFORMATION:
Company Name_____
Address_____
Phone/Toll-Free No. _____
Fax No. _____
E-Mail Address _____
Contact Person's Name _____
Estimated Delivery_____
Minority-Owned Business ___ Small Business ___ Veteran ___
Minority Woman Owned Business ___ Disabled Veteran ___
Women-Owned Business ___

NOTE: ALL BIDS RECEIVED ARE SUBJECT TO THE TERMS AND CONDITIONS

ALL BIDS MUST BE SIGNED – The undersigned offers the above quoted prices under the conditions contained herein.

The City is Exempt from all Federal and State Tax.
Bids will be received at the above mentioned address.

COMPANY: _____

TERMS OF PAYMENT: _____

SIGNATURE: _____

TELEPHONE NUMBER: _____

NAME AND TITLE: _____

BID SOLICITATION

City of Chattanooga
101 East 11th Street, Suite G13
Chattanooga, TN 37402

BID OPENING DATE AND TIME:
19-AUG-14 at 2:00 PM
BID NUMBER: 303435

BUYER:
PHONE #: (423) 643-7230
DELIVERY REQUIRED:

SEALED BIDS

Mail or submit two (2) signed copies of bid form to this office in the enclosed envelope. Retain one copy for your file.

VENDOR
RFQ

MAIL TO
City of Chattanooga
101 East 11th Street, Suite G13
Chattanooga, TN 37402

Item	Class-Item	Quantity	Unit	Unit Price	Total
1	Impeller, Cast Iron, A48 CL 30 Specs. Item #1, for 20" Fairbanks Morse SN K4C1-062035 w/14-16 Week Lead Time	1	Each	_____	_____
2	Fronthead, Cast Iron, A48 CL 30 Specs. Item #33, for 20" Fairbanks Morse SN K4C1-062035 w/14-16 Week Lead Time	1	Each	_____	_____

NOTE: ALL BIDS RECEIVED ARE SUBJECT TO THE TERMS AND CONDITIONS

ALL BIDS MUST BE SIGNED – The undersigned offers the above quoted prices under the conditions contained herein.

The City is Exempt from all Federal and State Tax.
Bids will be received at the above mentioned address.

COMPANY: _____

TERMS OF PAYMENT: _____

SIGNATURE: _____

TELEPHONE NUMBER: _____

NAME AND TITLE: _____

FAIRBANKS MORSE PUMP CORPORATION
MATERIAL SPECIFICATIONS
20" MODEL 2424 DRY PIT SOLIDS-HANDLING PUMP

ITEM	DESCRIPTION	MATERIAL	SPECIFICATION
1	IMPELLER	CAST IRON	A48 CL 30
4	PUMP SHAFT	STEEL	A108-C1141 OR A332-C4140 (2)
10	RING, WATER SEAL	TEFLON	TEFLON
14	SLEEVE, SHAFT	STAINLESS STEEL	A743-CA15300-350 BHN
16	WEAR RING, FRONTHEAD	STAINLESS STEEL	A743 CA40 300-350 BHN
17	WEAR RING, IMPELLER	STAINLESS STEEL	A743 CA40 350-400 BHN
19	GLAND HALF	CAST IRON	A48 CL30
A28-B28	PEDESTAL-FRAME/PUMP	STEEL	A283 GR D
30	VOLUTE	CAST IRON	A48 CL30
33	FRONTHEAD	CAST IRON	A48 CL30
34	ADAPTER	CAST IRON	A48 CL30
90	FRAME	CAST IRON	A48 CL30
102	KEY, IMPELLER	STEEL	AISI-1018
126	DEFLECTOR, INNER	RUBBER	COMMERCIAL
139	HOUSING, THRUST BRG	CAST IRON	A48 CL30
139A	LIP SEAL	STEEL & RUBBER	COMMERCIAL 75030
140	COVER, RADIAL BRG HSG.	CAST IRON	A48 CL 30
140A	SEAL, INNER	-	COMMERCIAL
156	GASKET, VOLUTE	SHEET PACKING	F104
158	HOUSING, THRUST BRG	CAST IRON	A48 CL 30
158A	LIP SEAL	STEEL & RUBBER	COMMERCIAL
159	COVER, THRUST BRG.	CAST IRON	A 48 CL30
159A	SEAL, OUTER GREASE		COMMERCIAL
161	LOCKNUT, BEARING	STEEL	SAE BOLT STEEL
162	LOCKWASHER, BEARING	STEEL	COMMERCIAL
162A	WASHER, KEYED	STEEL	COMMERCIAL
163	BEARING, RADIAL	STEEL	COMMERCIAL
168	BEARING, INNER THRUST	STEEL	COMMERCIAL
168A	BEARING, OUTER THRUST	STEEL	COMMERCIAL
200	SHIM, BEARING ADJUST.	STEEL	AISI 1010
202	CLEANOUT COVER	CAST IRON/STEEL	A48 CL 30/A283 GR D
203	GASKET, COVER	RUBBER	COMMERCIAL
212	PACKING	GRAPHITED,	SYNTHETIC
272	KEY, COUPLING	STEEL	AISI-1018
	COUPLING GUARD (4)	STEEL	COMMERCIAL
	COUPLING (5)		COMMERCIAL
994	CAP, IMPELLER	CAST IRON	A48 CL 30
994A	CAPSCREW, IMPELLER	STEEL	SAE J429 GR 8

1. All material designations are ASTM unless otherwise noted and are for description of chemistry only
2. Manufacturers option
3. These items are not supplied unless specifically ordered.
4. Supplied per OSHA requirements.
5. See specific coupling submittal elsewhere in this submittal.

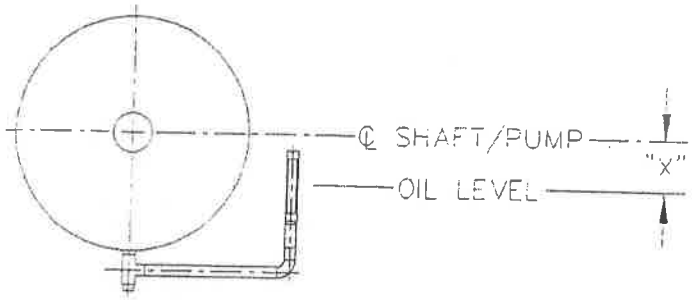

THRUST BEARING "X" = 4 1/2"
RADIAL BEARING "X" = 4 7/8"

TYPICAL SIGHT GAGE ASSEMBLY

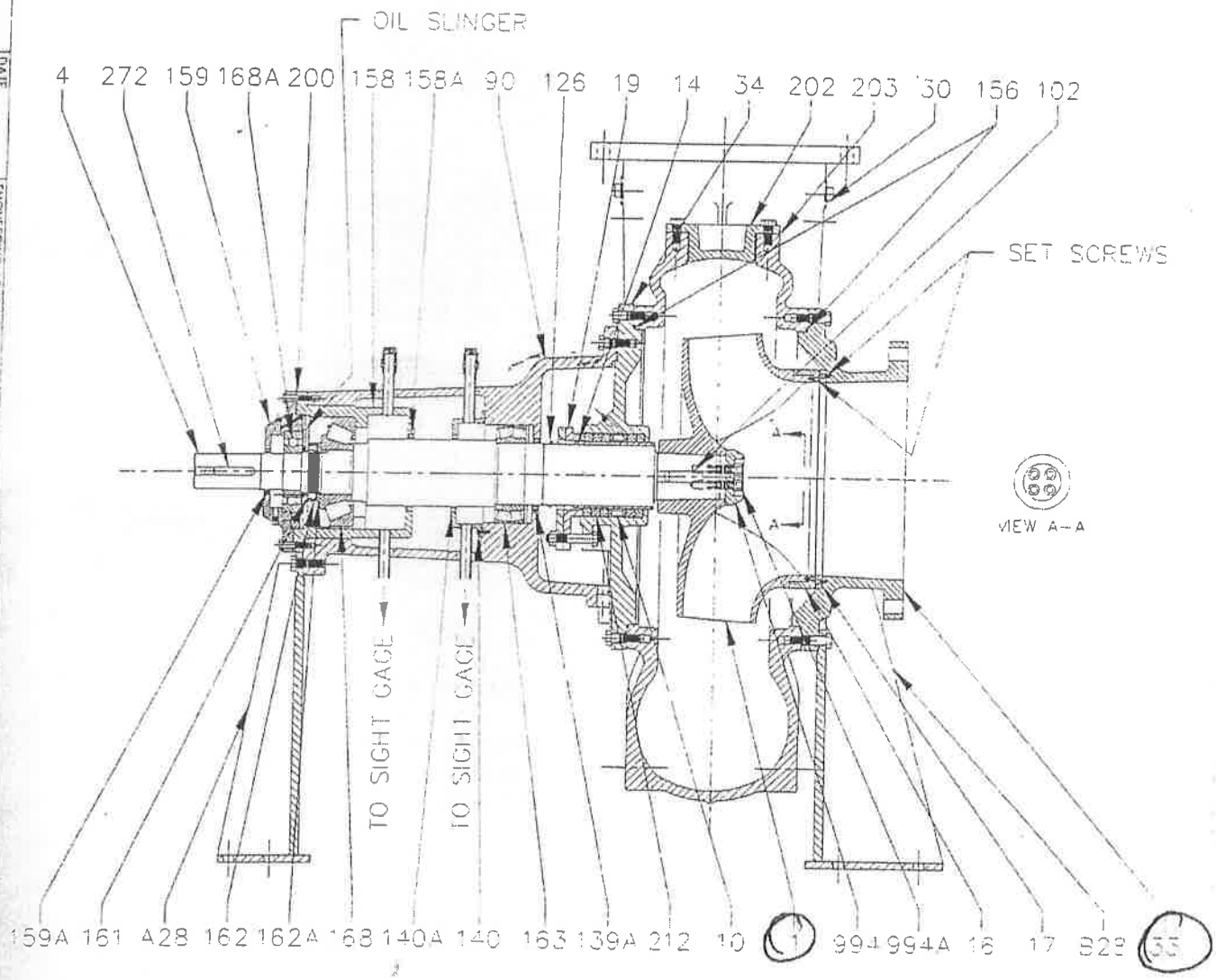

ASSEMBLY
20" 2424 OIL LUBE

Fairbanks Morse Pump Corporation

DWG NO AK4C1-062035 REV NO

DRAWN BY M. WAD DATE 11/9/94 CHECKED BY K. BAKER DATE 11/94 ENGINEERING APPROVAL DATE MARKETING APPROVAL DATE FOR

Affirmative Action Plan

The City of Chattanooga is an equal opportunity employer and during the performance of this Contract, the Contractor agrees to abide by the equal opportunity goals of the City of Chattanooga as follows:

1. The Contractor will not discriminate against any employee or applicant for employment because of race, color, religion, sex, national origin, or handicap. The Contractor will take affirmative action to ensure that applicants are employed, and that employees are treated during employment without regard to their race, color, religion, sex, national origin, or handicap. Such action shall include, but not be limited to, the following: employment, upgrading, demotion or transfer, recruitment or recruitment advertising, layoff or termination, rates of pay or other forms of compensation, and selection for training including apprenticeship. The Contractor agrees to post in conspicuous places, available to employees and applicants for employment, notices setting forth the provisions of this nondiscrimination clause.

2. The Contractor will, in all solicitations or advertisements for employees placed by or on behalf of the Contractor, state that all qualified applicants will receive consideration for employment without regard to race, color, religion, sex, national origin, or handicap.

3. The Contractor will send to each labor union or representative of workers with which he/she has a collective bargaining agreement or other contract or understanding, a notice advising said labor union or workers' representatives of the Contractor's commitments under this section, and shall post copies of the notice in conspicuous places available to employees and applicants for employment.

4. During the term of all construction contracts or subcontracts in excess of $10,000 to be performed for the City of Chattanooga, the following non-discriminatory hiring practices shall be employed to provide employment opportunities for minorities and women:

    a. All help wanted ads placed in newspapers or other publications shall contain the phrase "Equal Employment Opportunity Employer".
    b. Seek and maintain contracts with minority groups and human relations organizations as available.
    c. Encourage present employees to refer qualified minority group and female applicants for employment opportunities.
    d. Use only recruitment sources which state in writing that they practice equal opportunity. Advise all recruitment sources that qualified minority group members and women will be sought for consideration for all positions when vacancies occur.

5. Minority statistics are subject to audit by City of Chattanooga staff or other governmental agency.

6. The Contractor agrees to notify the City of Chattanooga of any claim or investigation by State or Federal agencies as to discrimination.

_____

(Signature of Contractor)

_____

(Title and Name of Company)

_____

(Date)